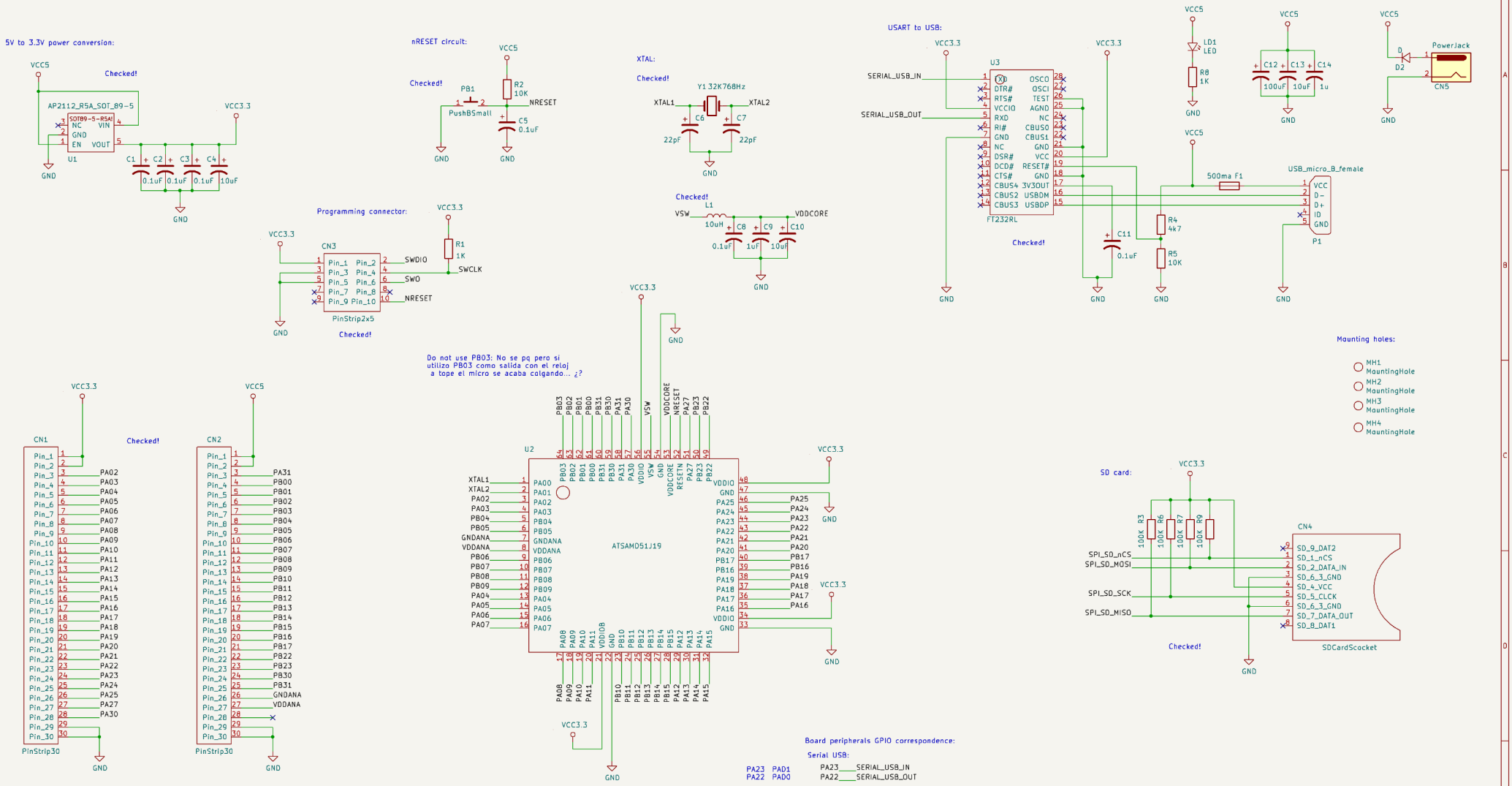

http://www.tolaemon.com/baresam

tolaemon – Jordi Bartolomé

Sheet: /

File: BaseBoard.kicad_sch

Title: bareSAM development board

Size: A3	Date: 10 – 20201	**Rev: 0.0**
KiCad E.D.A. kicad (6.0.11)		Id: 1/1

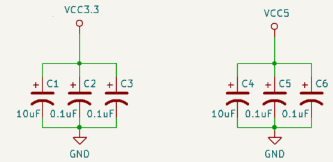

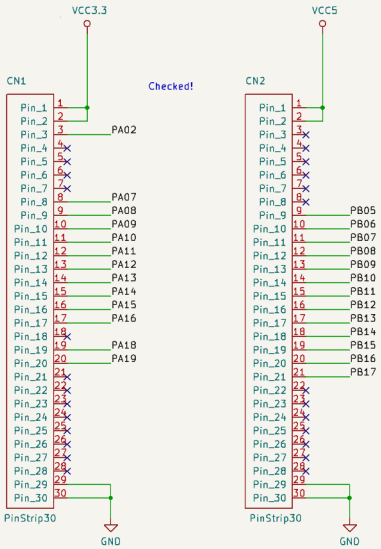

5V <> 3.3V , keyboard <> UC signal level conversion:

5.5V on A Port and 2.7V to 3.6V on B Port

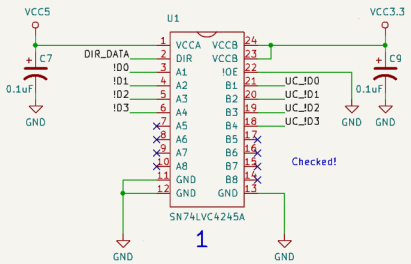

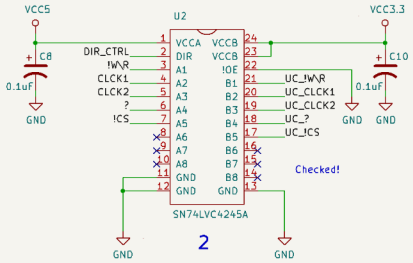

To ROMPACK keyboard connector:

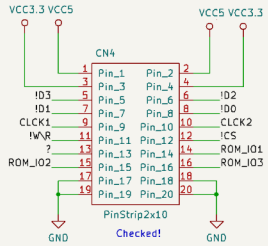

ROMPACK data bus pull down:

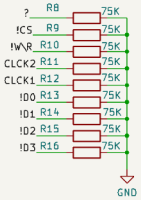

Mounting holes:

Graphic LCD (ST7735-SH1106):

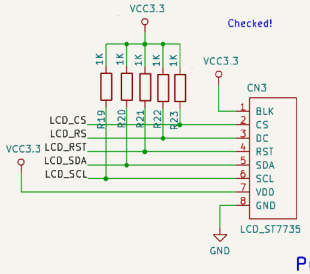

Board peripherals GPIO correspondence:

ROM-PACK:

PB11	UC_!WR
PB16	UC_CLCK1
PB17	UC_CLCK2
PA02	UC_?
PB10	UC_!CS
PB12	UC_!D0
PB13	UC_!D1
PB14	UC_!D2
PB15	UC_!D3
PA18	DIR_DATA
PA19	DIR_CTRL
PA14	ROM_IO1
PA15	ROM_IO2
PA16	ROM_IO3

LCD Display:

PB05	LCD_CS
PB06	LCD_RS
PB07	LCD_RST
PB08	LCD_SDA
PB09	LCD_SCL

Rotary encoder:

PA07	ENC_A
PA08	ENC_B
PA09	ENC_PUSHB

Push buttons:

PA10	PUSHB_A
PA11	PUSHB_B
PA12	PUSHB_C
PA13	PUSHB_D

Push buttons and encoders:

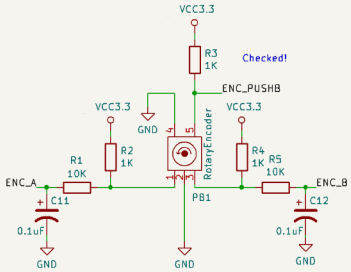

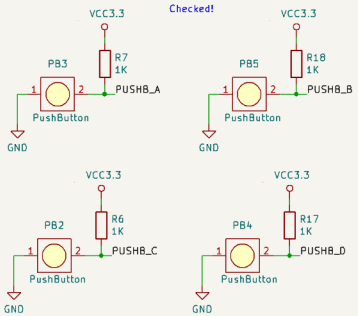

ATSAMD51	Metro M4	CasioROM Pack:
PB15	(6)	PIN1 - !Data3
PB14	(5)	PIN2 - !Data2
PB13	(4)	PIN3 - !Data1
PB12	(7)	PIN4 - !Data0
PB09	(A5)	PIN5 - R/!W
PB16	(3)	PIN6 - CLCK1
PB17	(2)	PIN7 - CLCK2
PA02	(A0)	PIN8 - ?
----	(GND)	PIN9 - Gnd
PB08	(A4)	PIN10 - !CS
----	(5V)	PIN11 - Vcc
		SN74LVC4245A signals: 0 = OUTPUT (B 3.3V to A 5.0V) , 1 = INPUT (A 5.0V to B 3.3V)
PA19	(D11)	IC2 PIN2 DIR_CTRL
PA18	(D10)	IC1 PIN2 DIR_DATA
USART signals:		
PA22	*Tx>(1)	FT232RL:
PA23	*Rx<(0)	PIN 5-RXD
		PIN 1-TXD
SPI-SD signals:		SD
PA04(SERCOM PAD0)	(A3)	MOSI - SD PIN2 DATA_IN
PA05(SERCOM PAD1)	(A1)	SCK - SD PIN5 SCK_IN
PA06(SERCOM PAD2)	(A2)	MISO - SD PIN7 DATA_OUT
PA20	(D9)	nCS - SD PIN1 nCS

tolaemon.com/dpack/

tolaemon - Jordi Bartolome

Sheet: /

File: HatBoard.kicad_sch

Title: drive Pack main unit hat board

Size: A3	Date: 11 - 2023	**Rev: 0.1**
KiCad E.D.A. kicad (6.0.11)		Id: 1/1

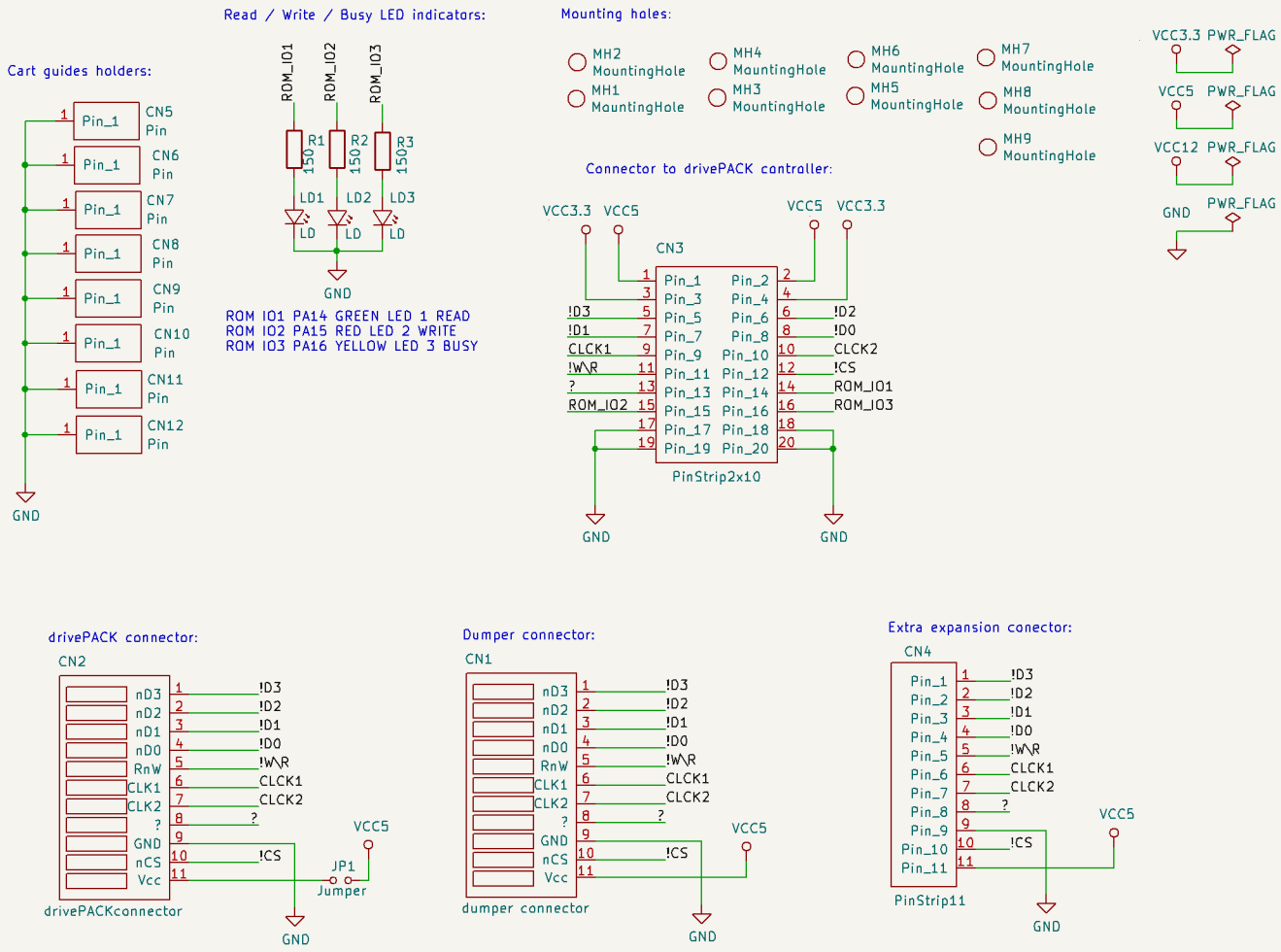

http://www.tolaemon.com/dpack/

tolaemon – Jordi Bartolome

Sheet: /

File: CartHeader.kicad_sch

Title: drive Pack header top board

Size: A4	Date: 11 – 2023	**Rev: 0.1**
KiCad E.D.A. kicad (6.0.11)		Id: 1/1